MEZZANINE DECKING

INSTALLATION INSTRUCTIONS

- TRED-eXtreme® panels should be allowed to adjust to the temperature and humidity of the room in which they will be installed.
- Store TRED-eXtreme panels flat on bunks or skids in a covered, dry and level area. Inspect panels on-site prior to installation.
- TRED-eXtreme panels can be installed on a corrugated steel substructure, or directly to joists if the panel has a plywood or OSB structural substrate. Span rating tables are available from Affiliated Resources. Please consult local building codes before installing without corrugated steel.

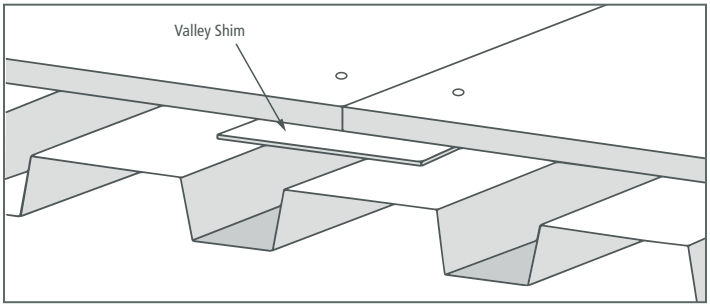

Figure A: Optional Valley Shims

- TRED-eXtreme panels can be installed either parallel or perpendicular to the corrugated decking. TRED-eXtreme panel edges must be supported by the corrugated ribs. Trim TRED-eXtreme panels, or use valley shims to support edges that do not fall on a corrugated rib. TRED-eXtreme can be cut using ordinary woodworking tools. High carbide saw blades are recommended. (See Figure A)

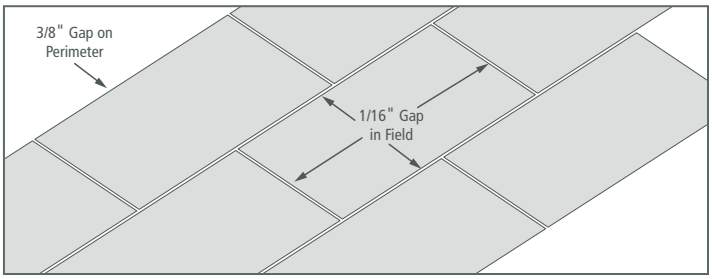

Figure B: Panel Spacing

- Leave a 3/8" gap around the perimeter of the floor, between the panels and walls (or edge of floor). Stagger panels so that adjoining panel edges do not end on the same rib and four panel corners do not meet at one point, where possible.
- It is very important to ensure that an expansion gap of no less than 1/16" is left around adjoining panel edges within the field of the floor.

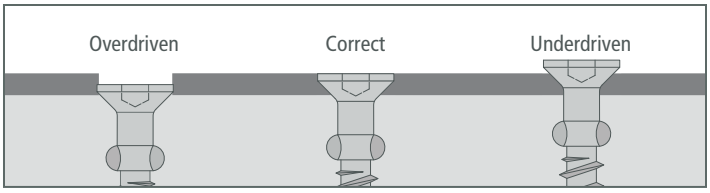

Figure C: Screw Depth

- Drive screws perpendicular to the surface and set flush or slightly countersunk. For best results, TRED-eX TEK screws are recommended. (See Figure C)

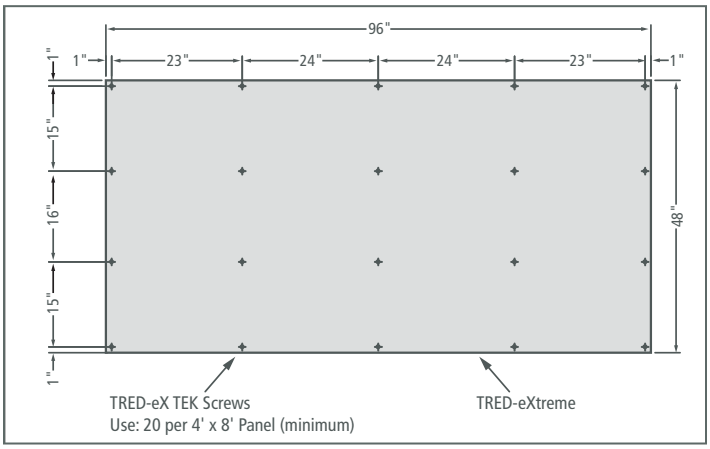

Figure D: Screw Pattern

- The minimum recommended screw pattern for TRED-eXtreme is 20 screws per 48" x 96" panel. Align screws no closer than 1" from panel edges, approximately 16" on center in the short (48") direction and approximately 24" on center in the long (96") direction of the panel. For panels installed directly to joists, install fasteners at every joist spaced no further than 16" across the panel. (See Figure D)
- Adjust screw patterns based on nominal panel sizes. (See Figure E)

Nominal Panel Size	Approximate Spacing (Panel Width)	Approximate Spacing (Panel Length)	Total Screws Per Panel
48" x 72"	16"	24"	16
48" x 96"	16"	24"	20
48" x 120"	16"	24"	24
60" x 96"	15"	24"	25
For custom panel sizes, screw pattern will need to be determined in the field			

Figure E: Common Screw Spacing

MEZZANINE DECKING

CARE & MAINTENANCE

TRED-eXtreme® floors require very little maintenance to keep them looking great. TRED-eXtreme's HDPE surface is very chemical resistant. Cleaning can usually be accomplished using standard cleaning solutions.

FOR EVERYDAY CLEANING & MAINTENANCE:

- A stiff, bristled brush can be used to scrub the panels with soap and hot water. Be sure not to soak or dump water on the panels. It is beneficial to remove any loose debris before scrubbing or mopping.
- Before Cleaning: Please test all cleaning methods in a small inconspicuous area before full application.
- Please follow all cleaning solution directions, recommendations, and precautions.

FOR TOUGHER STAINS OR HARD TO CLEAN AREAS:

- An industrial degreaser and/or emulsifier can be used when necessary on hard to clean areas. For best results, dilute the cleaning solution with hot water. It is beneficial to remove any loose debris before scrubbing or mopping.
- Before Cleaning: Please test all cleaning methods in a small inconspicuous area before using them.
- Please follow all degreaser and/or emulsifier directions, recommendations, and precautions.

Caution: Wood Dust

Cutting, sanding or machining wood products produces wood dust. While wood products are not hazardous under the OSHA Hazard Communication Standard (29 CFR 1910.1200), the International Agency for Research on Cancer (IARC) and the State of California have classified wood dust as a human carcinogen.

California Proposition 65 — WARNING

Drilling, sawing, sanding or machining wood products generates wood dust, a substance known to the State of California to cause cancer. Avoid inhaling wood dust or use a dust mask or other safeguards for personal protection.

California Health and Safety Code Section 25249.6

For additional information, see our Safety Data Sheets (SDS) as a download from our website at affiliatedresources.net/tred-ex

AFFILIATED RESOURCES
PROVIDING SOLUTIONS